Hardware Manual

VisionBox AGE-X^5

Version 1.8 – 2023

Contents

1 Handling and Safety Instructions

Depending on the operating conditions, the housing temperature can exceed 60 °C. There is a risk of injury!

Handle with care! The housing, especially heat sinks can have sharp edges. There is a risk of injury!

EMC conformity according to EN/IEC 61000-6-2:2005 is qualified for cable lengths ≤ 30 m.
Electrostatic discharge at unshielded I/O connectors can lead to unexpected events or data errors for the corresponding interface.

Electrical installation should be executed without power applied to the device and connected devices.

Before installing expansion cards, make sure that the VisionBox AGE-X is disconnected from power.
Use appropriate ESD protection when changing components.

Only open if advised by IMAGO!
Warranty void if warranty seal is removed or broken.

Please take special note of the **voltage range** which may be applied to the device. Otherwise, permanent damage to the device may result!

Air Circulation
When mounting the device within an enclosure, adequate space for air circulation is required. The space above, below and at both sides should be at least 5 cm.

Avoid extreme environmental conditions and protect the VisionBox from dust, humidity and heat.

Due to the characteristics and physical principles inside flash memory, **SSDs have a finite lifetime** dictated by the number of write operations.
Therefore, take care of the regular write operations to prevent an early SSD damage. Ask for the technical data of the used SSD and, if necessary, for support to calculate the lifetime.
Inform the user of the system that SSDs are wear parts which must be renewed regularly.

2 Introduction

Thank you very much for your interest in our VisionBox AGE-X. To get the most out of your purchase, please take some time to read all the information given here thoroughly.

This VisionBox is optimized for cameras using the GigE Vision or Camera Link interface. For multi-camera systems, not only several camera ports but also several integrated LED Controllers and digital I/Os allow a compact setup without additional electronics. If you need more connectivity or a specific PCIe board, kindly consult the other VisionBox alternatives.

The integrated Real-Time Communication Controller ensures proper timing between all devices, even when using Windows or Linux operating systems. To avoid complex cabling, the cameras can be connected through standard Ethernet cables. A single cable provides trigger, image data and power for each GigE camera.

Thanks to its small size, powered by $24V_{DC}$ and without fan, the AGE-X can be mounted into nearly every machine, also as IP65 version for OEM quantities.

All components are available for several years in order to provide continuous delivery without changes. The AGE-X-SDK can be used in C++ and .NET as well as with some third-party machine vision libraries to enable an easy integration with your products and projects.

For series production, IMAGO delivers the AGE-X ready-to-run, including customer-specific SSD image, qualified 3rd-party components and acceptance test.

2.1 Concept

the philosophy of the Vision Box AGE-X series it is about a real-time communication controller with vision- & automation-specific interfaces combined with an embedded Intel processor:

- 6th, 7th and 10th generation Intel x86 processor
- Real-Time Communication Controller *RTCC*:
  - Controls vision- & automation-specific interfaces:
    - Digital I/Os
    - Encoder
    - Camera trigger
    - LED Strobe Controller
  - Contains functional units for controlling I/Os in real time:
    - Trigger unit: Creation of trigger signals, derived from other inputs (e.g. encoder)
    - I/O scheduler: applies values stored in a FIFO to outputs in real time (based on trigger event, encoder position, or timer value)
    - Multiplexer: flexible connection of functional units
  - Operates independently from the OS & the x86 processor
  - Easy-to-use high-level API for C++, .NET and support by 3rd-party software tools
- 4 types of models:
  - 4x 1GigE
    - Four GigE Vision cameras can be connected
    - Option *PoE* / *ToE*: Power-over-Ethernet / Trigger-over-Ethernet from *RTCC* with a microsecond jitter
  - 4x 2.5GigE
    - Four GigE Vision cameras can be connected
  - Camera Link
    - Two Camera Link Base cameras can be operated or one Camera Link Medium / Full / Deca camera
    - Support for Power-over-Camera-Link (*PoCL*)
  - 2x 5GigE and 2x 1GigE
    - Two 5GigE Vision cameras and two 1GigE Vision cameras can be connected. It's also possible to operate four 1GigE Vision cameras.
- Digital I/Os:
  - Isolated
  - Status LEDs
  - Inputs up to 5 MHz with adjustable debouncing in *RTCC*. Communicated to x86 via interrupt or polling
  - Outputs up to 50 kHz / up to 1 A / up to 48 V
- x86 processor
  - Intel processors
  - Windows 10 IoT Enterprise

  - Windows 11 IoT Enterprise[1]
  - Debian GNU/Linux, optionally with *PREEMPT_RT* patch
- Housing
  - Passive cooling
  - All interfaces on front panel
  - 24 VDC power input
  - No moving parts
  - Service hatch for access to USB 2.0 for dongle
- More vision & automation interfaces
  - RS-422 inputs / outputs, e.g. for encoders
  - LED controllers up to 6 A strobe / 0,5 A continuous

[1] Windows 11 is only possible with 10th gen CPU

2.2 Configurations

The following table shows available features and interfaces for the different models of the VisionBox AGE-X5:

Model	4× 1GigE	4× 2.5GigE	2× 5GigE + 2× 1GigE	Camera Link
RAM	up to 32 GB[2]			
Storage	CFast SSD mSATA (optionally) SATA 3.0 (optionally) M.2 2280 M-key[3]			
USB	4× USB 3.0 or 4× USB 3.1[4]			
Display	DP++ (max. resolution 4096x2304 @ 60Hz)			
Ethernet (single)	1× 1GbE or 2.5GbE[5]			
Camera Interface	4x 1GigE	4x 2.5GigE	2x 5GigE, 2x 1GigE	Camera Link with PoCL 2× Base or 1× Medium / Full / Deca
Additional Options	4× PoE / ToE	-		
Dig. I/Os	8× IN / 8× OUT optionally 16× IN / 16× OUT			
LED Controller	2×, optionally 4×		2×	-
Camera Trigger	2×, optionally 4×		2×	-
Encoder / RS-422	Optionally 4× IN		Optionally 4× IN	3× IN / 3× OUT, optionally additional 4× IN

Table 1: Feature overview

Please also ask for special OEM configurations.

[2] 64 GB possible with 10th gen CPU
[3] M.2 socket is only present on 10th gen CPU models
[4] USB 3.1 is only provided with 10th gen CPU models
[5] 2.5GbE is only provided with 10th gen CPU models

2.3 Block Diagram

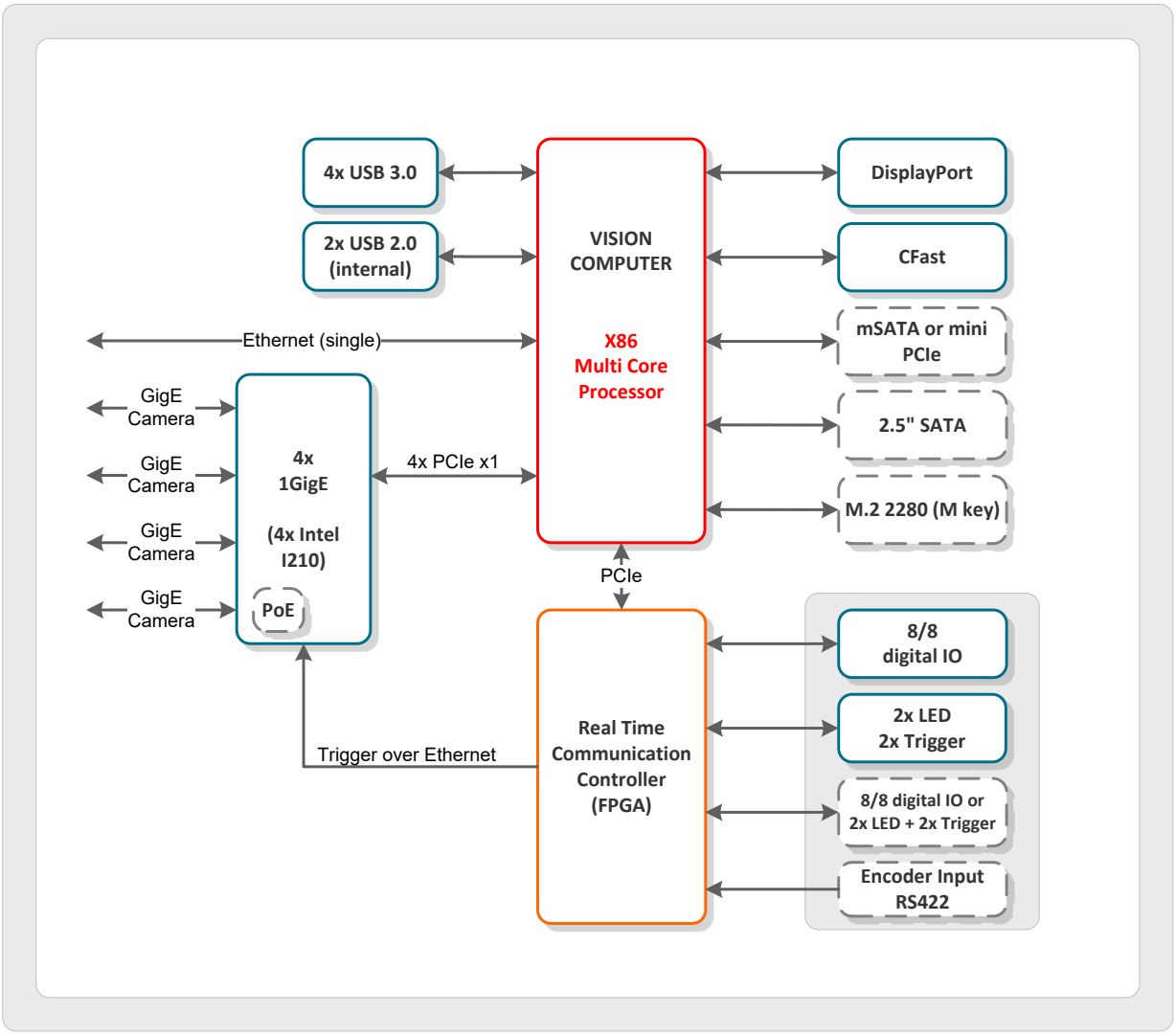

Figure 1: Block diagram: 4× 1GigE

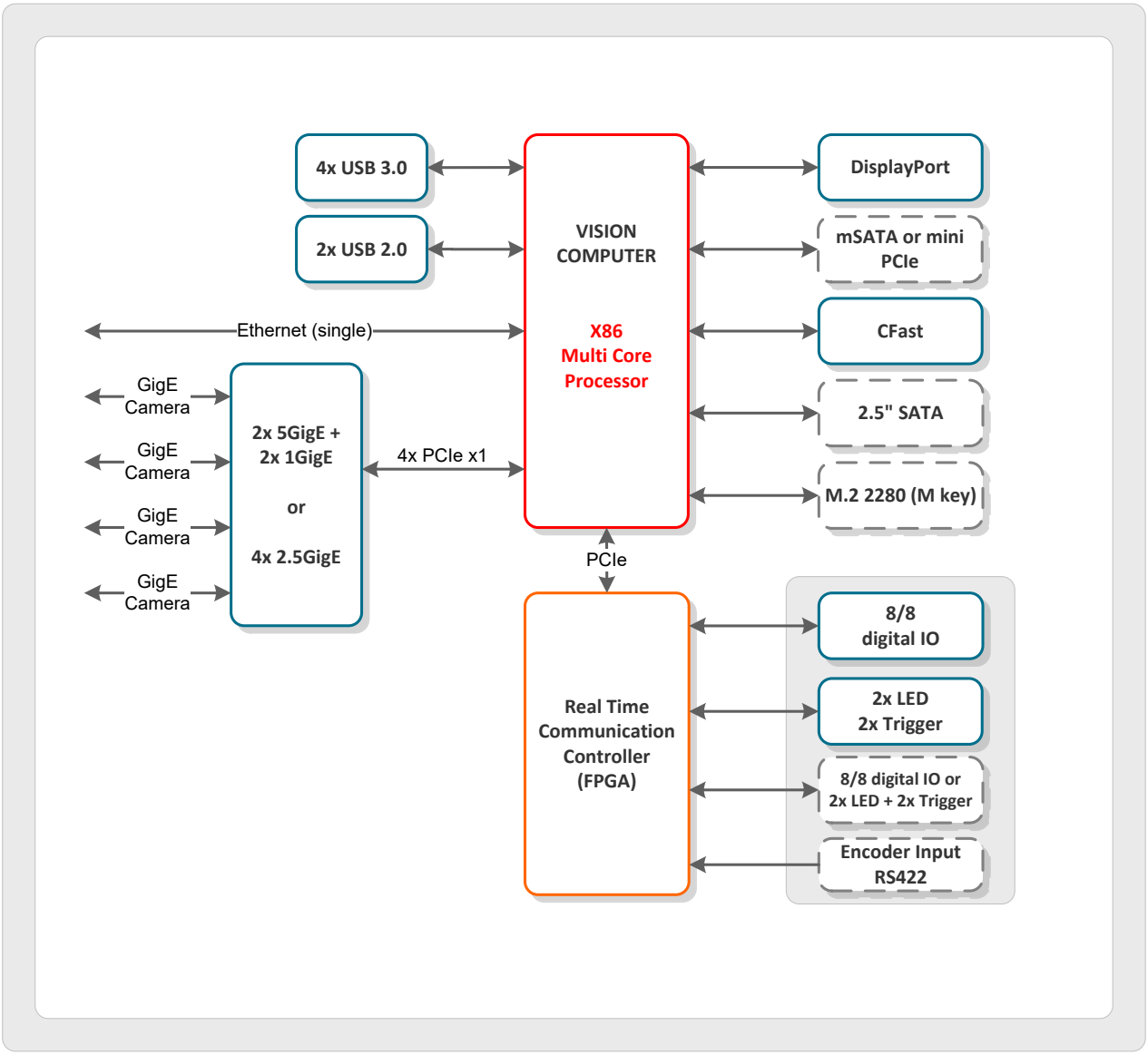

Figure 2: Block diagram: 2× 5GigE + 2× 1GigE or 4x 2.5GigE

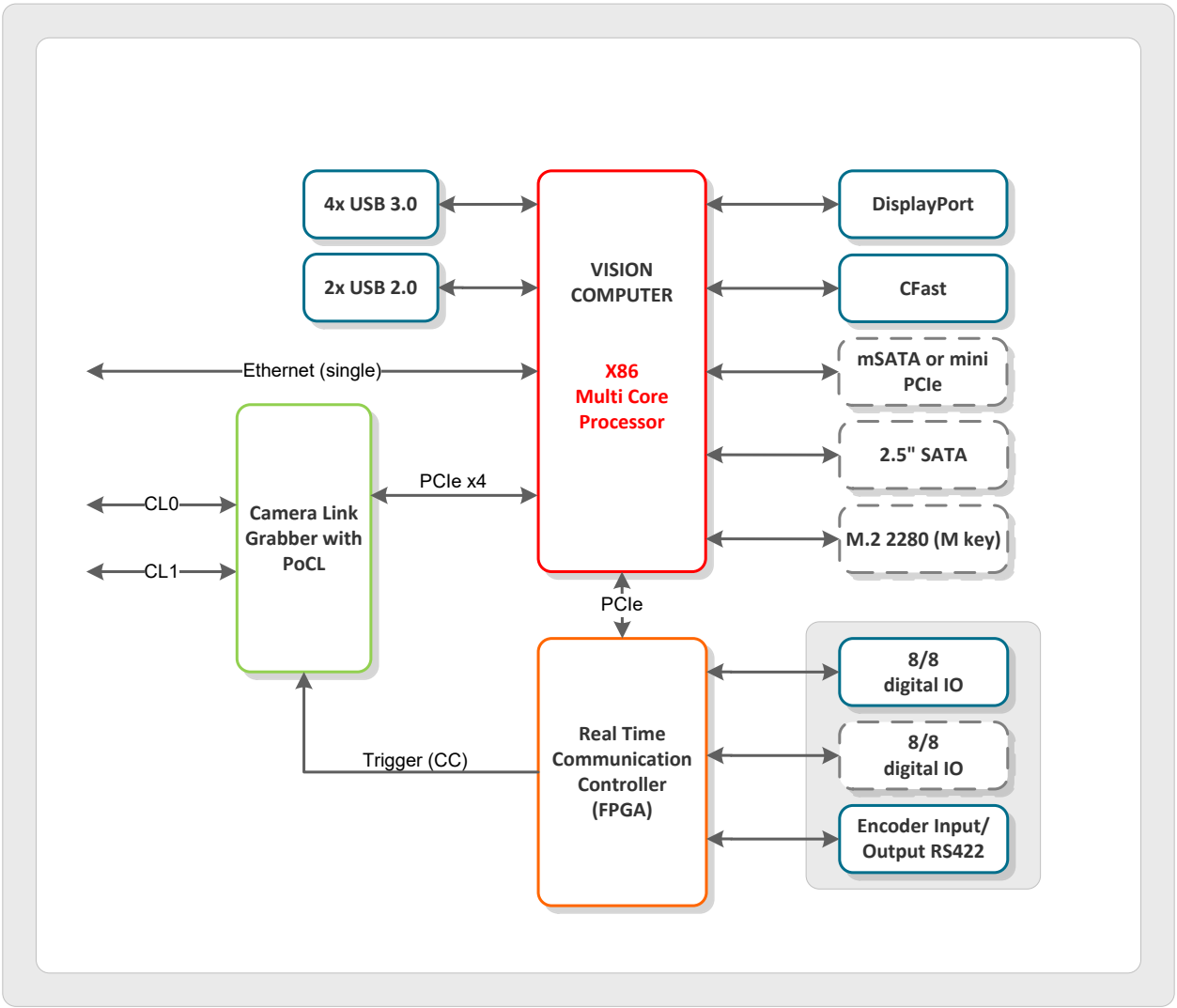

Figure 3: Block diagram: Camera Link

3 Technical Data

3.1 Processors

The following processors of 6th and 7th generation are currently supported:

	Celeron G3900	i5-6500TE	i7-6700TE	i5-7500T	i7-7700
Nominal Frequency	2.8 GHz	2.3 GHz	2.4 GHz	2.7 GHz	3.6 GHz
Turbo Frequency	- - -	3.3 GHz	3.4 GHz	3.3 GHz	4.2 GHz
Cores / Threads	2 / 2	4 / 4	4 / 8	4 / 4	4 / 8
TDP	51 W[6]	35 W	35 W	35 W	65 W

Table 2: Processor overview 6th and 7th generation

The following processors of 10th generation are currently supported:

	Pentium G6400E	i5-10500TE	i7-10700TE	i5-10500E	i7-10700E
Nominal Frequency	4.0 GHz	2.3 GHz	2.0 GHz	3.1 GHz	2.9 GHz
Turbo Frequency	- - -	3.7 GHz	4.4 GHz	4.2 GHz	4.5 GHz
Cores / Threads	2 / 4	6 / 12	8 / 16	6 / 12	8 / 16
TDP / Max. power in turbo	58 W[7]/ -	35 W / 92 W	35 W / 124 W	65 W / 134 W	65 W / 224 W

Table 3: Processor overview 10th generation

[6] Actual power values for this CPU are much lower than Intel specification.
[7] Actual power values for this CPU are much lower than Intel specification.

3.2 Operating Conditions

Power supply:

Parameter / CPU	Celeron G3900	i5-6500TE	i7-6700TE	i5-7500T	i7-7700	Pentium G6400E	i5-10500TE	i7-10700TE	i5-10500E	i7-10700E	Unit
Power supply	18..30							21…30	18..30	21…30	V
Power Consumption[8] (at TDP workload)	32	65			105	61	65	68	106	111	W
Power Supply Current Rating[9] (Peak current)	1.4	3.2			5.3	2.5	5.4 / 3.7[10]	7.8 / 3.8[11]	6.3	8.9	A
Continuous Supply Current Limit[12]	8										A

Environment:

Parameter	Value	Unit
Operating Temperature for Intel CPU 6th generation	+5 … +45	°C
Operating Temperature for Intel CPU 7th generation	+5 … +40	°C
Operating Temperature for Intel CPU 10th generation	+5 … +45	°C
Operating Humidity, relative, non-condensing	5 … 85	%
Storage Temperature	-10 … +70	°C
Storage Humidity, relative, non-condensing	5 … 95	%
Device Weight	≈2.4	kg

Note: The maximum allowed temperature is influenced by the actual hardware configuration, the system workload and the mounting situation. The temperature range should be verified for each application.

Note: The heat sink can transfer more heat in upright mounting position.

Note: Due to the lifetime of electronic components, we recommend not to operate the device permanently under the maximum possible temperature and instead use a lower than max temperature. Laws of physics say: if the average operating temperature is increased by 7°C, the lifespan of an

[8] Measured with CPU at TDP workload and without external devices except 1× Ethernet and DP.
[9] Measured with CPU at full workload; 24 V supply voltage; no external devices except 1× Ethernet link at 1000 Mbit/s. This value does not account for additional current drawn by interfaces like 4× Ethernet or for the supply of LED units and PoE / PoCL / USB devices.
[10] Power limit for turbo mode set to 53W in BIOS.
[11] Power limit for turbo mode set to 53W in BIOS.
[12] Certain possible usage combinations like simultaneous PoE / PoCL / USB device supply and active LED output can lead to continuous excess of this value, which must be avoided by the user.

electronic component will be divided in half! Following are common scenarios in industrial applications:

- Multiple devices are mounted inside an electrical cabinet
  ➔ The cabinet itself is equipped with an air conditioner.
- In a large electrical cabinet, a single device is mounted with other (low heat-producing) devices
  ➔ It is enough when a fan provides air circulation inside the cabinet.
- It is recommended that the application software regularly checks internal temperatures.

Digital Input:

Parameter		Min.	Typ.	Max.	Unit
Input voltage range		0		30	V
Input current range (limited by internal circuit)		0		21	mA
Threshold Voltage	Standard	6		11	V
	TLL-compatible (option)[13]	1.8		2.4	
Threshold current			1	5	mA
Input delay				250	ns

Digital Output:

Parameter	Min.	Typ.	Max.	Unit
Common VCC Supply Voltage (V_{CC} - V_{OUT})	0		30	V
Output Current, Saturated Operation (V_{CC} - V_{OUT}) < 1 V			10	mA
Turn-On Time (24 V Common VCC, 10 mA)		5		µs
Turn-Off Time (24 V Common VCC, 10 mA)		15		µs

[13] TTL-compatible option is only available for the second I/O module

RS-422[14] (Encoder):

Parameter	Min.	Typ.	Max.	Unit
Receiver Input Hysteresis		45		mV
Receiver Input Offset			3.3	V
Receiver Data Rate			10	Mbps

LED Controller:

Parameter[15]	Min.	Typ.	Max.	Unit
Strobe Current Range	0.05		6	A
Strobe Current Step Size		30		mA
Maximum Continuous Current (V_{Supply}=28 V, V_{Load}=24 V)		0.5		A
Minimum Flash Duration @ 2 A		10		µs
Flash Duration Step Size		1		µs
Turn-on delay (6 A)		3		µs
Turn-on delay (100 mA)		80		µs
Turn-off Delay (6 A)		2		µs
Turn-off Delay (100 mA)		50		µs

Camera Trigger:

Parameter	Min.	Typ.	Max.	Unit
ACQ TRG High Voltage		24		V
ACQ TRG Low Voltage		0.5		V
ACQ TRG High Side Current		20		mA
ACQ TRG Maximum Low Side Sink Current		100		mA

Ethernet with 4× PoE Option (IEEE 802.3af/at):

Parameter	Min.	Typ.	Max.	Unit
PoE Output Voltage		53		V
PoE Class Support	0		4	
Total PoE Supply Power for all Four Ports[16]			55	W

[14] A “Fail-Safe” circuit is used for the input signals to put unconnected terminals into a defined state.
[15] The maximum current and strobe timing limits are calculated by the software, depending on the used parameters.
[16] For example, two class 4 devices or four class 3 devices can be powered simultaneously.

3.3 Dimensions

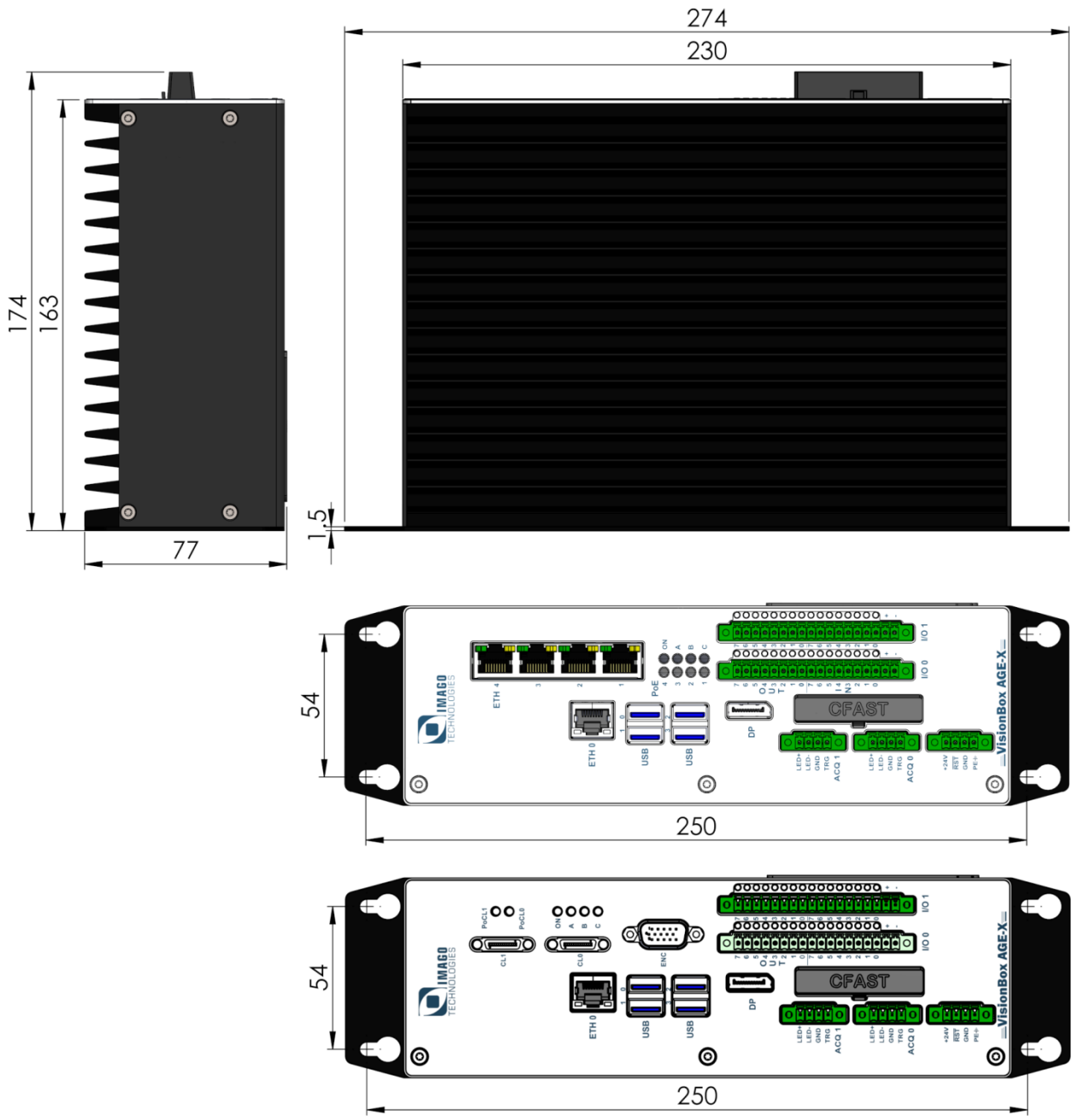

Figure 4: Housing dimensions (in mm)

4 Power Connector and LEDs

4.1 Power Connector

Figure 5: Power plug

Pin	Function
+24V	24 V power supply
RST	Reset input, low active
GND	Ground
PE	Shield / housing connection

Table 4: Power connector

The $\overline{\text{RST}}$ terminal can be pulled to GND to reset the VisionBox during operation. A falling edge will trigger the reset. Leaving the signal floating is the default mode for normal operation.

Phoenix Contact plug component: **MC 1,5/4-STF-3,5** (order no. 1847071)

4.2 System LEDs

The computer has four main system LEDs. These LEDs are dual color (bicolor) types. The functionality of the LED A, B and C can be changed by software.

Figure 6: Status LEDs

LED	Color	Function (green)
On	Green	Power On
	Red	FPGA configuration error
	Orange blinking	Backup firmware is loaded
	Orange	System shutdown or reset
A	Green	User LED 0
	Red	User LED 1
B	Green	User LED 2
	Red	User LED 3
C	Green	User LED 4 (default: SATA/CFAST activity)
	Red	User LED 5

Table 5: System LED values

5 Interfaces

This chapter describes the interfaces for the VisionBox AGE-X5.

5.1 Ethernet Interface (Single)

The single Ethernet interface is present for all hardware configurations.

- 6th or 7th generation CPU: 1GbE (1000BASE-T)
- 10th generation CPU: 2.5GbE (2.5GBASE-T)

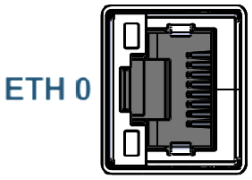

Figure 7: Ethernet connector (single)

Assignment of the status LEDs:

Link state	Upper LED
Link down	Off
Link up, no traffic	On
Link up, traffic	Blinking

Table 6: Upper LED

Link speed	6th / 7th gen. CPU	10th gen. CPU
10 Mbit/s	Off	Off
100 Mbit/s	Green	Off
1000 Mbit/s	Orange	Green
2500 Mbit/s	-	Red

Table 7: Lower LED

5.2 Ethernet Interface (Quad)

The VisionBox AGE-X5 with Quad GigE is available in the following configurations:

- 4× 1GigE (1000BASE-T), optionally with PoE and ToE (see following sections)
- 4× 2.5GigE (2.5GBASE-T)
- 2× 5GigE (port 1, 2: NBASE-T) + 2× 1GigE (port 3, 4: 1000BASE-T)

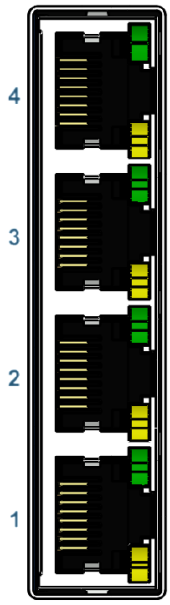

Figure 8: Ethernet connector

Link speed	Port configuration			
	4x 1GigE	*4x 2.5GigE*	*2x 5GigE*	*2x 1GigE*
10 Mbit/s	Off	Off	-	Off
100 Mbit/s	Off	Off	Green	Off
1000 Mbit/s	Green	Green	Green	Green
2500 Mbit/s	-	Green	Green	-
5000 Mbit/s	-	-	Off	-

Table 8: Upper LEDs

Link state	Port configuration			
	4x 1GigE	*4x 2.5GigE*	*2x 5GigE*	*2x 1GigE*
Link down	Off	Off	Off	Off
Link up, no traffic	Off	On	On	On
Link up, traffic	Blinking	Blinking	Blinking	Blinking

Table 9: Lower LEDs

For the 5GigE version, there are two additional status LEDs in the front panel indicating a 5000 Mb/s link for ports 1 and 2:

Figure 9: 5GigE status LEDs

5.2.1 Power-over-Ethernet

The optional PoE feature for the VisionBox AGE-X5 with 4× 1GigE provides power to PoE enabled devices.

Four additional status LEDs signaling the power state are associated with the four ports:

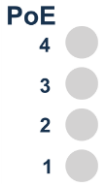

Figure 10: Ethernet PoE LEDs

LED State	Description
Green blinking	Searching for PoE device
Green on	PoE device found and powered
Red blinking all LEDs	Error code
Red flash single LED	See ToE section below

Table 10: PoE LED state

5.2.2 Trigger-over-Ethernet

The optional Trigger-over-Ethernet (ToE) feature for 4× 1GigE adds support for the GigE Vision Action Command. It can be used to trigger cameras over Ethernet in real time. The GigE specification allows sending these messages by a different device, distinct from the primary application, which normally runs on the main CPU. A sideband interface allows the Real-Time Communication Controller to introduce packets into the network:

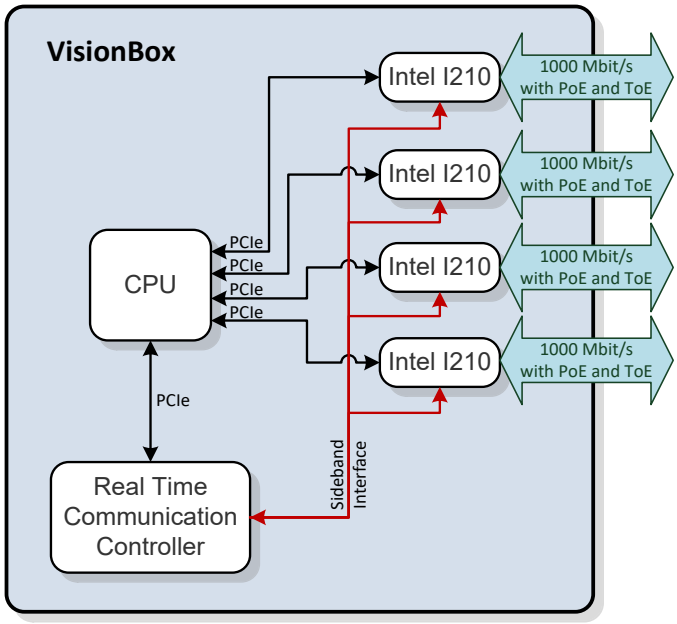

Figure 11: GigE real-time trigger diagram

Up to four different Action Commands can be defined by the application.

The PoE state LEDs described previously are also used for Action Commands: each LED is associated with one of these Action Commands. When an Action Command packet is transmitted, the respective LED will flash red very shortly. The PoE state will still be shown for each port by the green LED.

Please note that Action Commands don't belong to any port. All Action Commands are broadcast on all four ports.

5.3 DisplayPort Monitor Interface

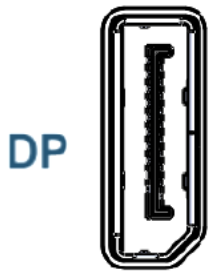

Figure 12: DP connector

The DisplayPort interface a maximum resolution of 4096 × 2304 pixels with framerate of 60/s.

5.4 CFast

The slot supports cards up to the CFast 2.0 specification with interface speeds of 6 GB/s, 3 GB/s and 1.5 GB/s. The BIOS can boot from this device, but a card hot swap is not supported. The card edge is behind a service flap which can be removed tool-free.

Figure 13: CFast with dust protection flap

5.5 Digital I/O

The digital I/O interface provides an input group and an output group. Each group has eight signals, and all groups are electrically isolated from each other, as well as from other VisionBox circuits and interfaces.

The following illustration shows the corresponding electrical equivalent circuit for one input and one output group:

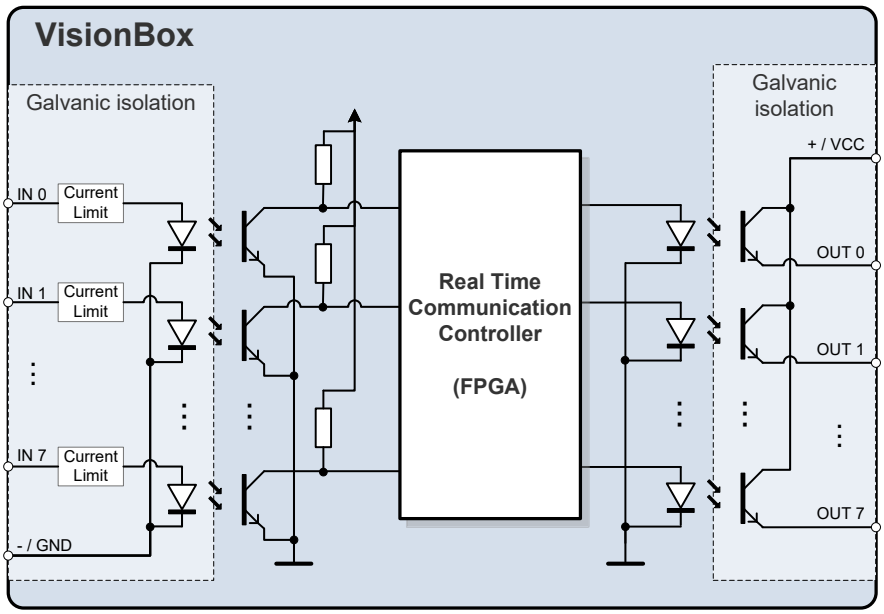

Figure 14: Simplified digital I/O circuit

The input group requires external connection of a shared GND reference. For the output group, the user must provide a supply voltage to the VCC pin which is used by all output signals. Every input and output have an LED to show the current state of each channel.

The connector arrangement is shown below:

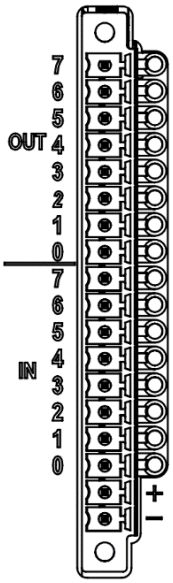

Figure 15: Digital I/O connectors

Pin	Function
+	Common VCC of outputs
-	Common GND of inputs
IN 0…7	Input 0…7
OUT 0…7	Output 0…7

Table 11: Pin assignment I/O connector

External plug component: Phoenix contact **MC 1,5/18-STF-3,5** (order no. 1847288)

The standard version of the digital output interface allows high-speed signaling, but with limited current ability. The output current can be increased by connecting multiple output terminals with each other. Software must configure the Real-Time Communication Controller to use the same signal source for these outputs.

A high-current hardware option for the digital outputs is also available. See section 3.2 Operating Conditions for electrical specifications.

Example 1: Connecting multiple cameras to a single output with high-current option.

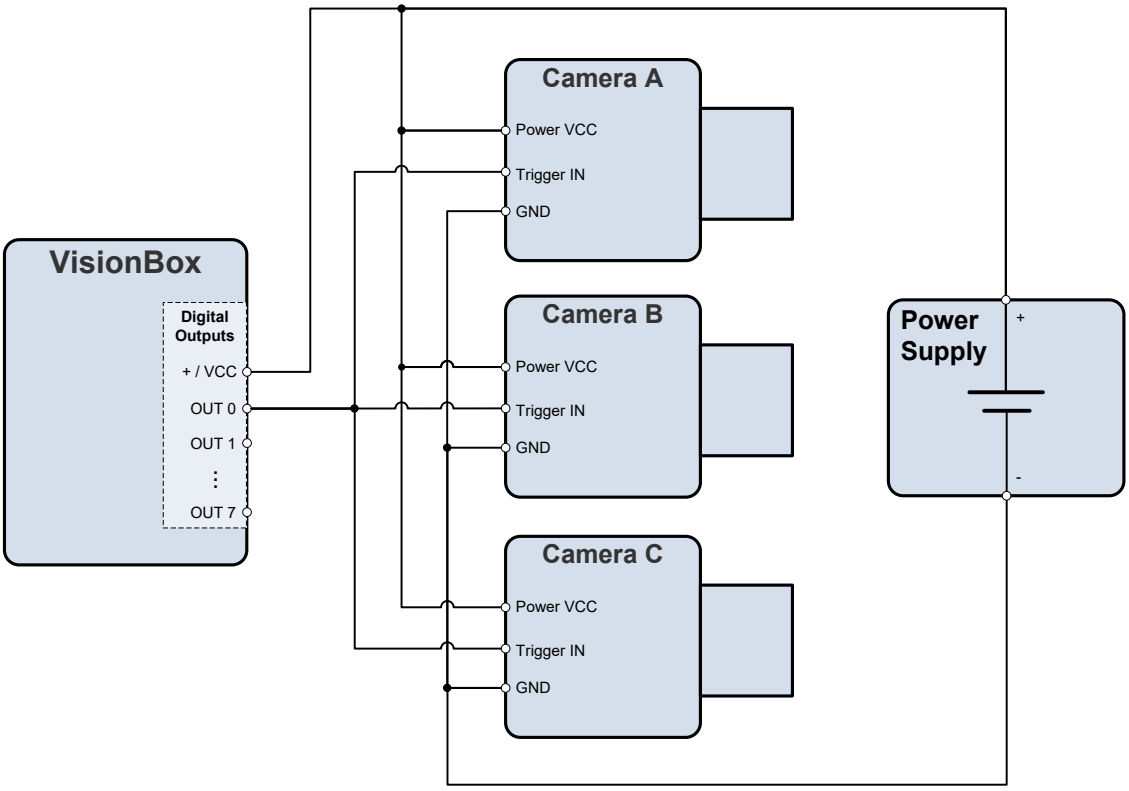

Figure 16: Digital I/O example 1

Depending on the voltage and isolation requirements of the application, the VisionBox can be powered from the same or from a different power supply.

Example 2: Connecting a relay to an output with high-current option.

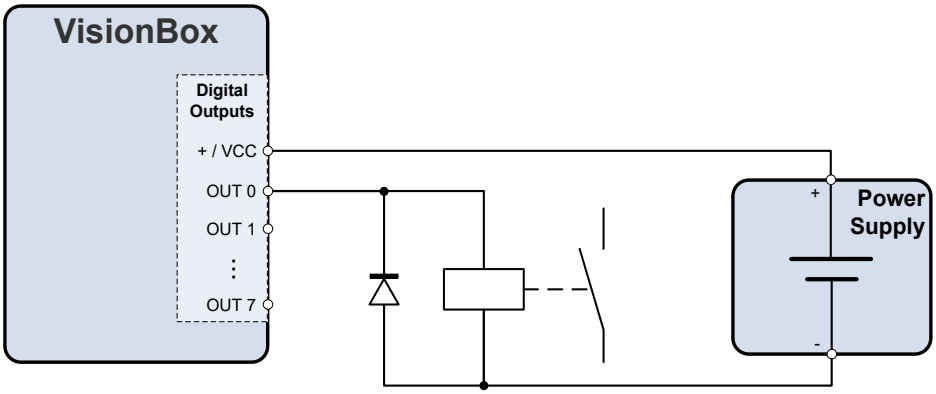

Figure 17: Digital I/O example 2

Please note that a flyback diode as shown in the drawing should be used to protect the output circuit from voltage spikes at deactivation.

5.6 RS-422 Interface

The RS-422 interface can be used to connect additional devices like encoders, sensors and cameras. The behavior is controlled by the Real-Time Communication Controller.

D-Sub 15-HD Connector:

Figure 18: Encoder connector (D-Sub 15-HD)

For example, the AMPHENOL connector **L77HDE15SOL2** can be used to make a connection to the VisionBox.

The optional RS-422 connector is available for all configurations, and it provides four input signals:

Pin	Function
1	In1-
2	In2-
3	In3-
4	N/C
5	+5 V
6	GND
7	In1+
8	In2+

Pin	Function
9	In3+
10	N/C
11	In0+
12	In0-
13	N/C
14	N/C
15	+12 V

Table 12: RS-422 pin assignment for GigE versions

Pins #5 and #15 provide a 5 V / 12 V power supply for RS-422 encoders. They are protected internally by a 2 A fuse.

The Camera Link version always provides a RS-422 connector with three input and three output signals:

Pin	Function
9	Out2+
10	Out1+
11	In0+
12	In0-
13	Out0+
14	Out0-
15	+12 V

Table 13: RS-422 pin assignment for Camera Link version

5.7 LED Controller and Camera Trigger

The VisionBox provides two LED Controller channels and two Camera Trigger channels. Each connector shares one LED Controller and one Camera Trigger channel.

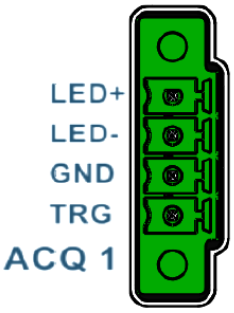

Figure 19: LED / Camera Trigger connector

Name	Function
LED+	Positive output / current source
LED-	Negative output / current sink
GND	Ground reference
TRG	Trigger output

Table 14: Pin assignment LED / Camera Trigger

Phoenix contact plug component: **MC 1,5/4-STF-3,5** (order no. 1847071)

5.7.1 LED Controller

The LED Flash Controller is designed as a current source. Output current, flash duration and other parameters can be set via software.

The following diagram shows the internal structure for the LED Controller:

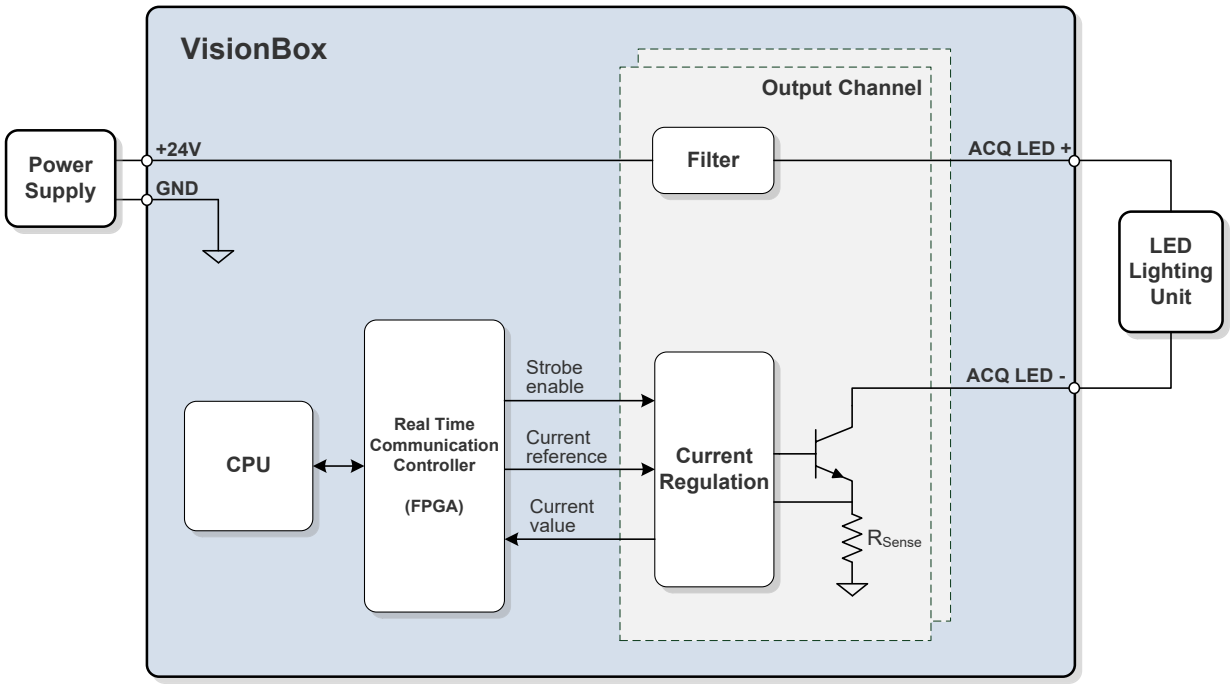

Figure 20: LED Controller structure

5.7.2 Camera Trigger

The electrical behavior of the camera trigger output can be controlled via software. Each output has two transistors, one for the positive and one for the negative side. Both transistors can be programmed independently. Therefore, the output can be configured in push-pull, open-collector or emitter-follower configuration:

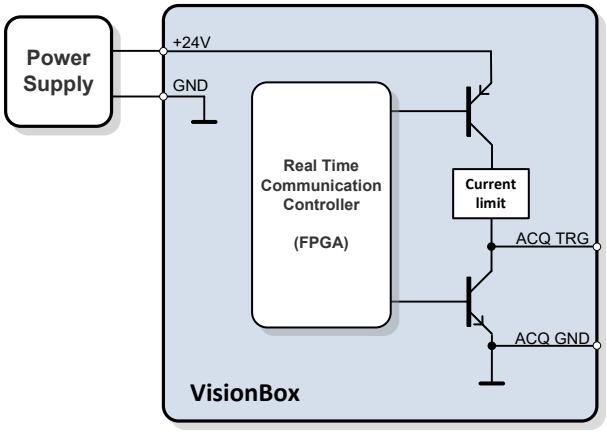

Figure 21: Simplified camera trigger diagram

The high-side switch is connected to the power supply voltage of the VisionBox and has a current-limiting circuit.

5.8 Camera Link

The VisionBox AGE-X5 with Camera Link has two MiniCL / SDR 26 connectors.

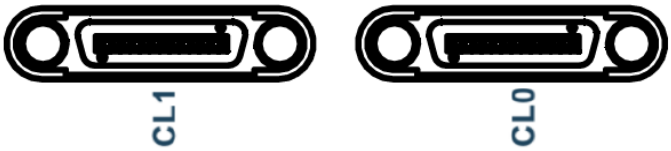

Figure 22: Camera Link connectors

The Camera Link interface supports the following features:

- Camera Link Dual-Base configuration:
  - 2x Base / 1x Medium Camera Input
  - 2x Serial communication interface
- Camera Link Full / Deca configuration:
  - 1x Base / 1x Medium / 1x Full / 1x Deca Camera Input
  - 1x Serial communication interface
- Camera Control signals (CC) can be controlled by software or by the RTCC.
- Providing power to the camera using *Power-over-Camera-Link*.

A different FPGA firmware is used to select between Dual-Base and Full configuration.

5.8.1 Power-over-CameraLink

The VisionBox AGE-X5 with Camera Link provides two CL connectors. If a PoCL-capable camera and Camera Link cable are used, the powered supply can be provided by the VisionBox through the same cable. PoCL is supported independently for both connectors.

A LED is assigned to each Camera Link connector to indicate the PoCL state:

Figure 23: PoCL status LEDs

LED	PoCL State
Red	Connection sensing
Green blinking	Non-PoCL camera detected
Green	PoCL camera detected and power supply active

Table 15: PoCL LED signaling

6 Internal Connectors

A service hatch enables access to the internal USB2 ports.

When opening the service hatch, make sure that the VisionBox has been completely disconnected (power, interfaces) and your environment is protected against ESD.

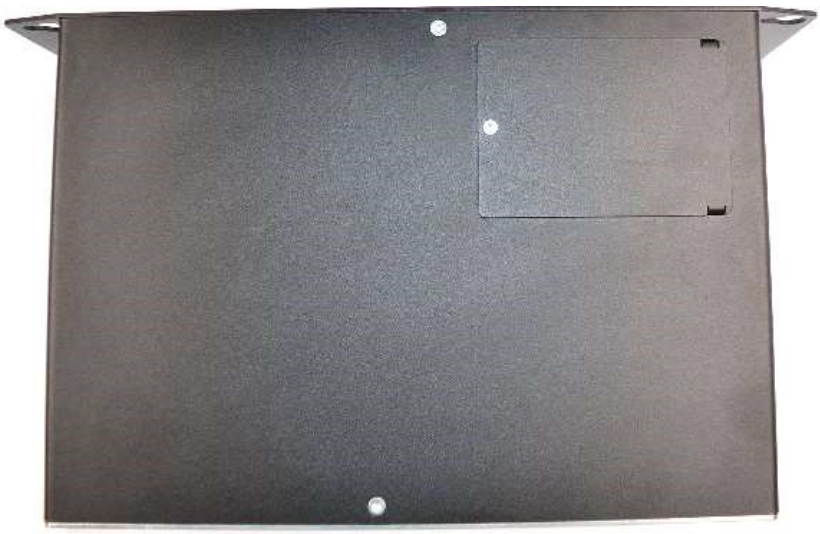

Figure 24: Service hatch (option)

6.1 USB 2.0

There are two USB 2.0 type A sockets inside the VisionBox. Please note that no current-limiting circuit is provided on these ports.

Figure 25: USB 2.0 connectors

6.2 SATA

Optionally, there is a place for a 2.5” HDD/SSD at the bottom of all VisionBoxes AGE-X. The drive can have a maximum height of 9.5 mm and can use a SATA link with a maximum speed of 6 Gbit/s. If the customer chooses this option, both cables (data and power) are pre-installed.

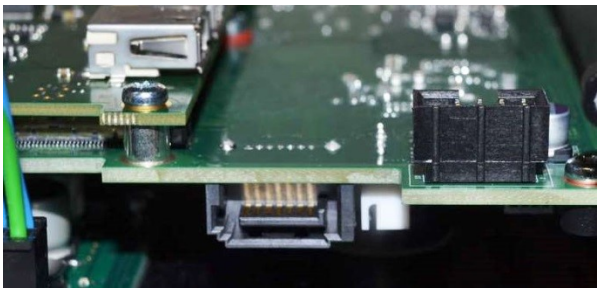

Figure 26: SATA and power connector

6.3 CMOS Battery

The CMOS battery (type CR2032) is not accessible via the service hatch. If necessary, the battery can be replaced by carefully removing the housing cover, taking out the old battery and inserting a new one.

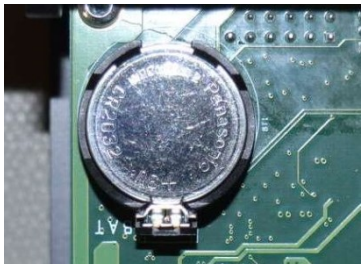

Figure 27 : Location of the battery holder

7 Accessories

This list shows some compatible connectors, shells and plugs to support the device interfaces. Typically, the plugs are not included in the device package.

7.1 Third-party Components

Vendor:	Type:	Part Number:	Usage:
Phoenix	MC 1,5 / 4-STF-3,5	1847071	Power connector / camera trigger & LED interface
Phoenix	MC 1,5 / 18-STF-3,5	1847288	Digital In / Out

There is also a connector set with plugs available. Please refer to the following table or ask for more details.

7.2 IMAGO Accessories

Order Number	Description
10100071	Connector set: 1x 4 Pin power connector, 2x 18 Pin I/O
10005154	Connector set: 1x 4 Pin power connector, 1x 18 Pin I/O
10100069	Connector set: 2x 4 Pin LED/Trigger

More accessories and upgrades are available upon request.

8 History

Revision	Date	Changes	Initials
1.0	12.2017	First version	rg / mb
1.0	02.2018	Text revision	vm / av
1.0	02.2018	Text revision; PDF	cs
1.1	04.2019	Information added Digital In-/Outputs; Add Camera Link model “Leopard+”	vm / rg
1.2	04.2019	New block diagram for GigE and CL, new drawings, general update of all chapters, text revision	av / vm
1.3	04.2020	Added KBL processors, added 5GigE, updated IMAGO accessories, added 5GigE block diagram, new pictures of status LED PoE, CL.	av
1.4	07.2020	Add RS-422 IN/OUT description for the Camera Link version	rg
1.5		Correct Ethernet status LED information	rg
1.6	07.2021	Tables 3.1. and 3.2. modification regarding data and format	rk/dm
1.7	10.2022	Update Main Picture	dm
1.8	09.2023	Added 10th generation CPU models and relating data	ab