Hardware Manual

Vision Cam XM2

Version 1.1 – September 2023

Contents

1 Handling and Safety Instructions

Depending on the operating conditions, the housing temperature can exceed 60 °C. There is a risk of injury!

Electrical installation should be executed without power applied to the device and connected devices.

EMC conformity according to EN/IEC 61000-6-2:2005 is qualified for cable lengths ≤ 30 m.

Only open the housing if advised by IMAGO!

➔ Warranty void if product is opened without authorization by IMAGO.

Please take special note of the voltage range which may be applied to the device. Otherwise, permanent damage to the device may result!

Due to the characteristics and physical principles of flash memories, **SSDs have a finite lifetime** depending on the number of write operations. Therefore, take care of regular write operations to prevent early flash wear out.

2 Introduction

The heart of the Vision Cam XM2 is the powerful NVIDIA Jetson Orin NX or Nano. It comes with up to 8 Arm cores and 1024 CUDA cores. The Vision Cam XM2 incorporates the high-speed 5.2 Megapixel sensor *Lince5M*. We deliver the Vision Cam with an Ubuntu based Linux OS, which gives the customer the ability to use the popular Linux programs, libraries, and development tools.

The integrated Real-Time Communication Controller (*RTCC*) ensures proper timing for trigger signals, independently from the operating system. The IMAGO SDK provides a consistent C++ and Python programming interface for controlling the *RTCC*.

Due to its small size, powered by $24V_{DC}$ and without fan, the Vision Cam can be mounted into nearly every machine. All components are available for several years for continuous delivery without changes. For series production, IMAGO delivers the Vision Cam ready-to-run, including a customer-specific Linux root filesystem and functional test. A PREEMPT_RT kernel is also available.

2.1 Main features

- NVIDIA Orin NX / Nano
  - 6 or 8-core Arm® Cortex®-A78AE v8.2 64-bit CPU
  - NVIDIA Ampere architecture with up to 1024 NVIDIA® CUDA® cores and 32 Tensor Cores
  - Up to 16 GB RAM
- Image sensors:
  - 5.2 Megapixel Lince 5M
  - Monochrome or Bayer pattern
- Real-Time Communication Controller
  - Controls vision- & automation-specific interfaces
    - Digital inputs and outputs
    - Encoder
    - Camera Trigger
  - Contains functional units for controlling I/Os in real time:
    - *Trigger unit*: creation of trigger signals, derived from other inputs (e.g. encoder)
    - *I/O Scheduler*: applies values stored in a FIFO to outputs in real time (based on trigger event, encoder position, or timer value)
    - *Multiplexer*: flexible connection of functional units with each other
  - Operates independently from Arm processor and OS
  - Easy-to-use high-level API for C++ and Python
- Interfaces
  - 1x Gigabit Ethernet
  - 4x digital output
  - 4x digital input
  - 1x RS-232
  - 1x USB 2.0
  - Optional RS-422 inputs (e.g. for incremental encoders)
- Storage
  - NVMe SSD 60 GB
- Housing
  - Passive cooling without heat sink
  - IP65 versions available
  - Lens mount: C-mount

2.2 Block Diagram

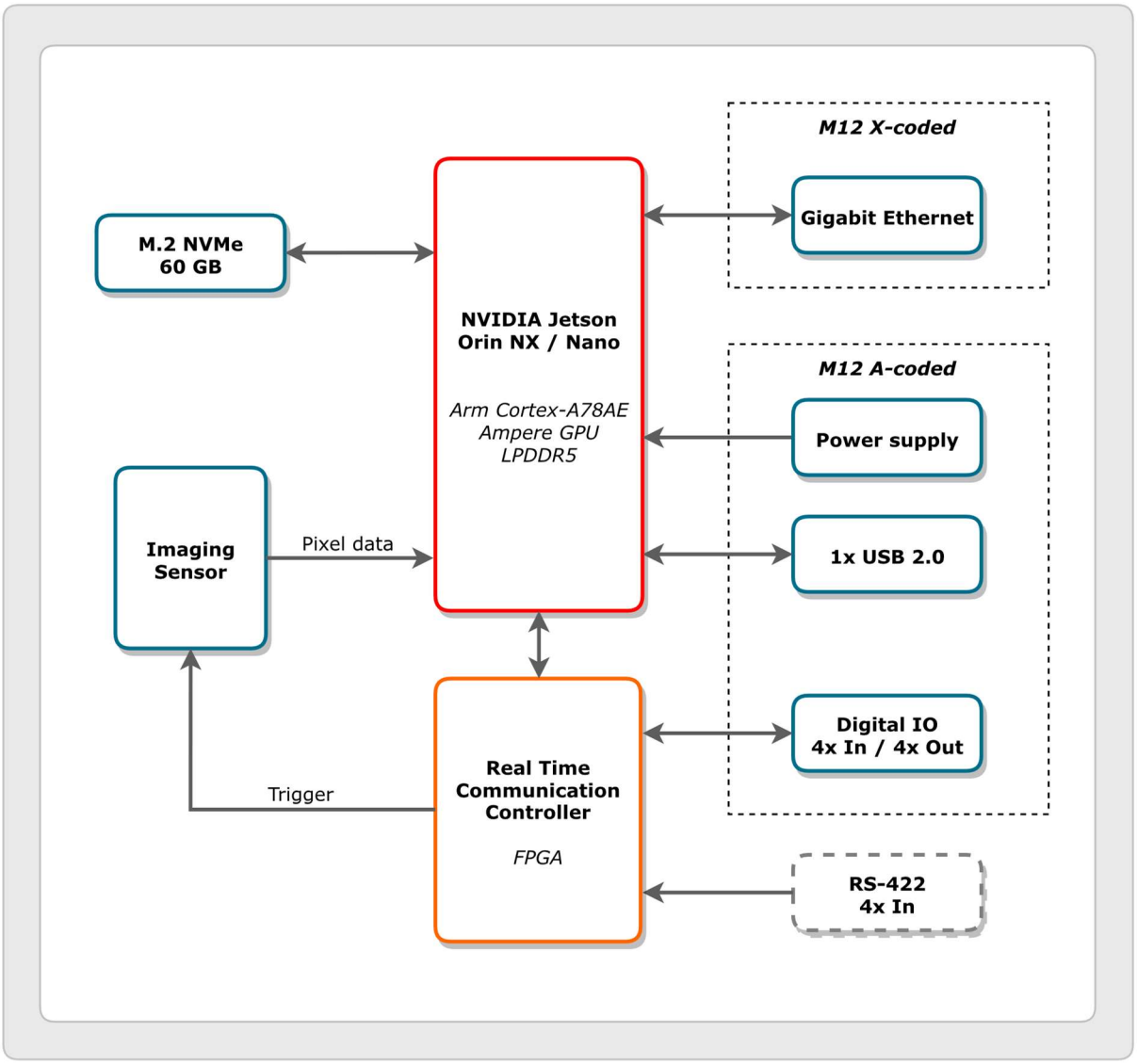

Figure 1: Block diagram

3 Technical Data

3.1 Jetson Orin NX / Nano

The following Jetson Orin models are available for the Vision Cam XM2:

	Jetson Orin Nano		Jetson Orin NX	
	4GB	8GB	8GB	16GB
CPU	6 cores, 1.5 GHz		6 cores, 2 GHz	8 cores, 2 GHz
GPU	512 NVIDIA® CUDA® cores, 16 Tensor Cores, 625 MHz	1024 NVIDIA® CUDA® cores, 32 Tensor Cores, 625 MHz	1024 NVIDIA® CUDA® cores, 32 Tensor Cores, 765 MHz	1024 NVIDIA® CUDA® cores, 32 Tensor Cores, 918 MHz
DL Accelerator	-	-	1x NVDLA v2.0, 614 MHz	2x NVDLA v2.0, 614 MHz
Vision Accelerator	PVA v2.0			
Memory	4 GB 64-bit LPDDR5, 34 GB/s	8 GB 128-bit LPDDR5, 68 GB/s	8 GB 128-bit LPDDR5, 102.4 GB/s	16 GB 128-bit LPDDR5, 102.4 GB/s
Storage	60 GB NVMe			
Module power limit	7…10 W	7…15 W	10…20 W	10…25 W

Table 1: Jetson Orin models

Note: The actual number of active cores and the frequency and power limits depend on the configured Power Mode for each Orin model.

3.2 Operating Conditions

Power Supply:

Parameter		Value	Unit
Supply voltage		18 … 30	V
Power supply current rating (values for 24 V)	Orin power limit: 7 W	0.8	
	Orin power limit: 10 W	1	A
	Orin power limit: 15 W	1.3	A
	Orin power limit: 20 W	1.9	A
	Orin power limit: 25 W	2.2	A

Environment:

Parameter	Value	Unit
Operating temperature	0 … (see below)	°C
Storage temperature	-10 … +70	°C
Storage humidity, relative, non-condensing	5 … 95	%
Device weight, without lens or tube	≈0.34	kg

Operating temperature:

The maximum operating temperature depends on the configured power mode, the system workload, and the mounting situation. Adequate cooling must be provided to maintain nominal performance. The temperature requirements should be verified for each application.

More information can be found in the Vision Cam XM2 Linux OS documentation available at https://api.imago.tech:

- Thermal considerations
- Jetson Power Modes

RS-232:

Parameter	Min	Typ.	Max	Unit
RX signal input range	- 15		15	V
TX output voltage swing (R_L = 3 kΩ)	± 4.25	± 4.7		V
Data rate, R_L = 3kOhm, C_L = 500 pF			1000	kbps

Digital Input:

Parameter	Min.	Typ.	Max.	Unit
Input voltage range	0		25	V
Rising edge threshold voltage	7.4		9.4	V
Falling edge threshold voltage	4.7		6.3	V
Input resistance		15.5		kΩ

Digital Output:

Parameter	Min.	Typ.	Max.	Unit
Output current			50	mA
Output high voltage		V_{Supply} - 0.2		V

RS-422:

Parameter	Min.	Typ.	Max.	Unit
Receiver differential input threshold	-200		200	mV
Receiver input hysteresis		45		mV
Receiver data rate			10	Mbps
5V encoder supply output current			500	mA
12V encoder supply output current			250	mA

3.3 Storage

The Vision Cam XM2 uses an integrated NVMe as mass storage device. It contains the Linux root file system and the user data.

3.4 Real-Time Clock

The Vision Cam XM2 provides a Real-Time Clock which is buffered by a supercapacitor. After powering the camera for one hour, it can maintain the time for about four weeks.

The time can be adjusted with Linux either manually, by a NTP server on the internet, or by a local NTP server.

4 Interfaces

4.1 Power and I/O connector

A 17-pin M12 A-coded male connector is used for power supply and I/O signals.

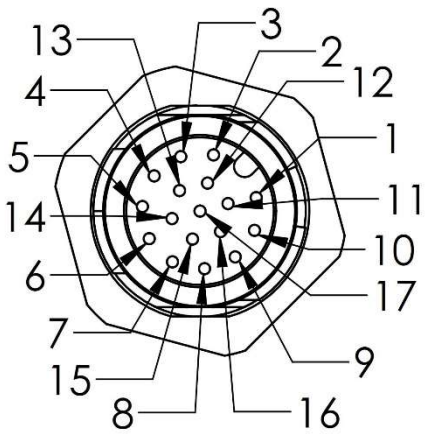

Pin Number	Function
1	GND (supply and I/O)
2	Power supply (+24 V)
3	RS-232 TX
4	RS-232 RX
5	Digital IN0
6	Digital IN1
7	Digital IN2
8	Digital OUT0
9	Digital OUT1
10	Digital OUT2
11	Digital OUT3
12	Digital IN3
13	USB D+
14	USB D-
15	Reserved[1]
16	RECOVERY[2]
17	VBUS (+5 V output)

We recommend shielded cables, for example:

Length	Product	IMAGO order code
1.5 m	Phoenix contact 1430284 “SAC-17P- 1,5-35T/FS SH SCO”	10004440
3 m	Phoenix contact 1430297 “SAC-17P- 3,0-35T/FS SH SCO”	10004441
5 m	Phoenix contact 1430307 “SAC-17P- 5,0-35T/FS SH SCO”	10004442

There are also angled and solder versions available.

[1] Pin 15 is reserved for future use and should not be left open.

[2] Leave pin 16 open for normal operation. Connecting pin 16 to GND during power-on will put the device into USB recovery mode, see section USB.

4.1.1 Digital I/O

The following illustration shows the electrical equivalent circuit for the digital input and output signals:

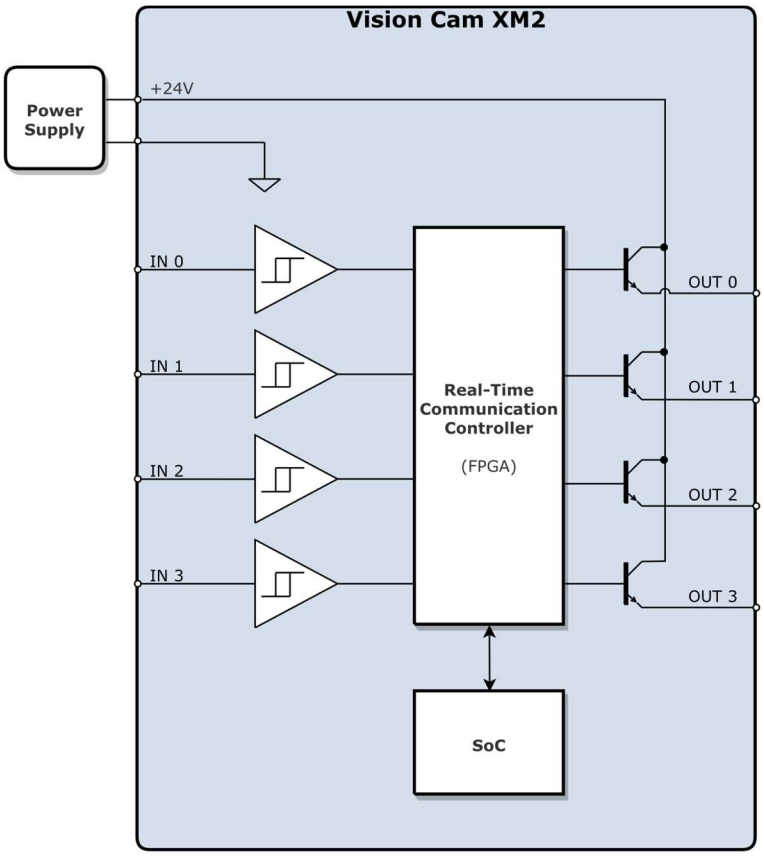

Figure 2: Simplified digital I/O circuit

The input signals use a Schmitt trigger circuit with the power supply GND as voltage reference.

The digital output circuit uses open-emitter configuration. All outputs are internally supplied by the 24V power input.

4.1.2 RS-232

The RS-232 interface is normally used as additional console device for Linux. It can also be configured for use by a custom application.

The TX and RX signals use the power supply GND pin 1 as reference potential. Make sure that the remote device uses the same GND reference.

Default settings for the serial interface:

Setting	Value
Baud rate	115200 bps
Parity	None
Data bits	8
Stop bits	1
Flow control	None

4.1.3 USB

A USB device can be connected to pins 13 (D+) and 14 (D-). The interfaces supports High-Speed signal rate of 480 Mbit/s. Pin 17 provides +5 V power supply to the device (max. 900 mA).

USB recovery mode:
Connecting pin 16 to GND during power-on will put the device into USB recovery mode. This is indicated by a green blinking power LED. Only use this mode if advised by IMAGO. Do not try to flash the Jetson OS image provided by NVIDIA!

4.2 1 Gbit/s Ethernet M12

The Vision Cam uses an 8-pin M12 X-coded female connector for Ethernet.

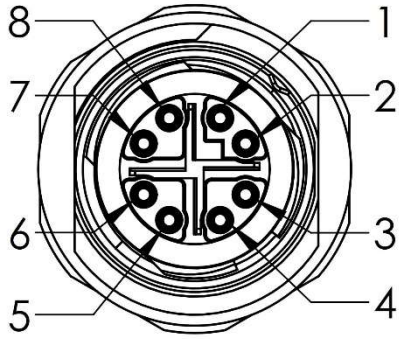

Pin Number	Function
1	D1+
2	D1-
3	D2+
4	D2-
5	D4+
6	D4-
7	D3-
8	D3+

Shielded cables are recommended, for example:

Length	Product	IMAGO order code
1 m	Phoenix contact 1407471 “NBC-MSX/ 1,0-94F/R4AC SCO”	10007049
2 m	Phoenix contact 1407472 “NBC-MSX/ 2,0-94F/R4AC SCO”	10007050
5 m	Phoenix contact 1407473 “NBC-MSX/ 5,0-94F/R4AC SCO”	10008076

4.3 Status LEDs

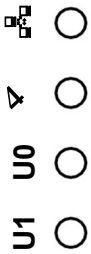

Figure 3: Status LEDs

LED	Color	Function
	Green	Ethernet link is up
	Red	Ethernet activity
4	Green	Power On
	Green blinking	USB recovery mode
	Red	Power off
U0	Green	User LED 0
U1	Green	User LED 1

Table 2: Status LEDs

4.4 RS-422

The optional RS-422 interface uses a D-SUB15 HD male connector and provides four input signals. The inputs are typically used with a rotary encoder for example.

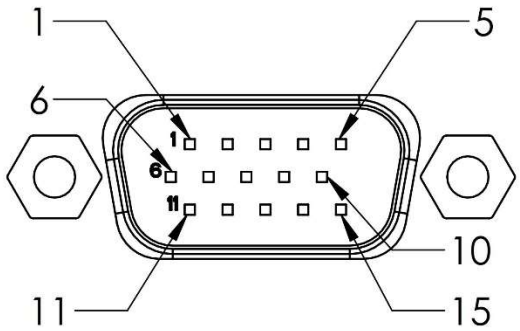

Pin	Function
1	IN1-
2	IN2-
3	IN3-
4	Reserved
5	5V DC output
6	GND
7	IN1+
8	IN2+
9	IN3+
10	Reserved
11	IN0+
12	IN0-
13	Reserved
14	Reserved
15	12V DC output

Connector pins 5 and 15 provide a 5 V / 12 V power supply for RS-422 encoders. See chapter 3 for current limits.

Do not insert a plug while the device is powered. There is a risk of making a short circuit on the supply output pins with the connector shield.

5 Image Sensors

This chapter will give you a short overview about the available sensors for the Vision Cam XM2.

	Teledyne Anafocus Lince5M
Optical format	1”
Resolution	2560 × 2048
Framerate (full resolution)	165 fps
Type	Monochrome or Bayer pattern

5.1 Teledyne Anafocus Lince5M

Overview:

- Full resolution: 2560 x 2048
- Monochrome or RGB Bayer pattern
- Partial scan function (AOI) to increase the frame rate, e.g. 1216 x 680 @ 1000 fps
- Global Shutter

Sensor	Technology	CMOS
	Optical Format	1"
	Resolution	2560 x 2048 pixels
	Framerate (full resolution)	165 fps
	Partial Scan	Yes
	Color	Monochrome or Bayer pattern
	Pixel Size	5.0 µm x 5.0 µm
	A/D Converter	12-bit
	Exposure	1 µs …
	Digital Gain	0 … 8

Characeristics	Sensitivity	6 V / lux-s
	DSNU	50 e-/sec, 10 DN12/sec
	PRNU	0.5 %
	Dynamic Range	58 dB
	SNR	42 dB

Trigger	Trigger Modes	Free Run, SW-Trigger, HW-Trigger via *RTCC*
	Exposure Indicator output	Yes

Total Quantum Efficiency – Monochrome sensor

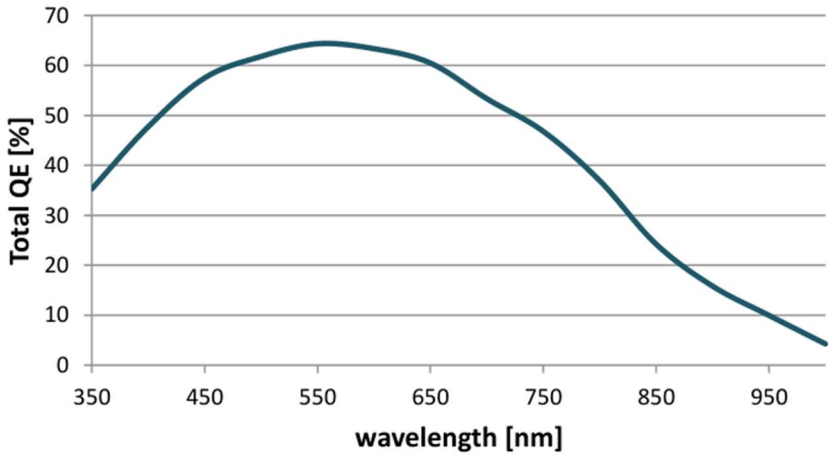

Color Filter Response – Color sensor

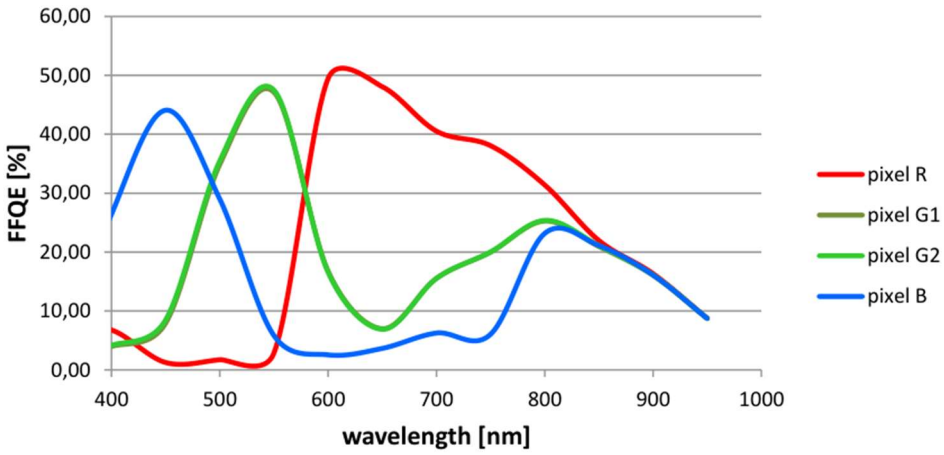

Note:

The use of an IR cut-off filter in the optical path is necessary to obtain good color separation when using light with an NIR component.

6 Mechanical Drawings

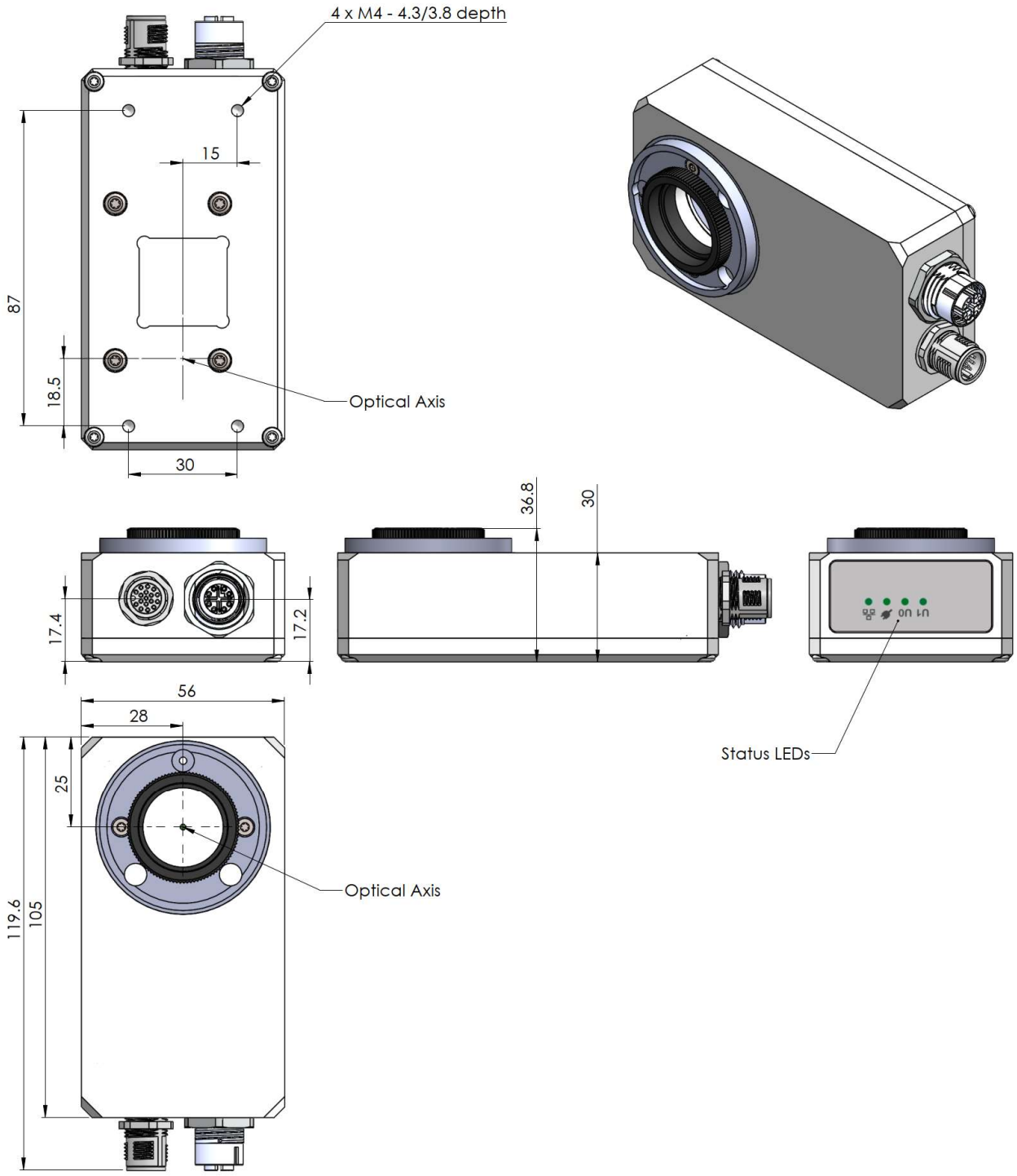

Figure 4: Dimensions for Standard Version

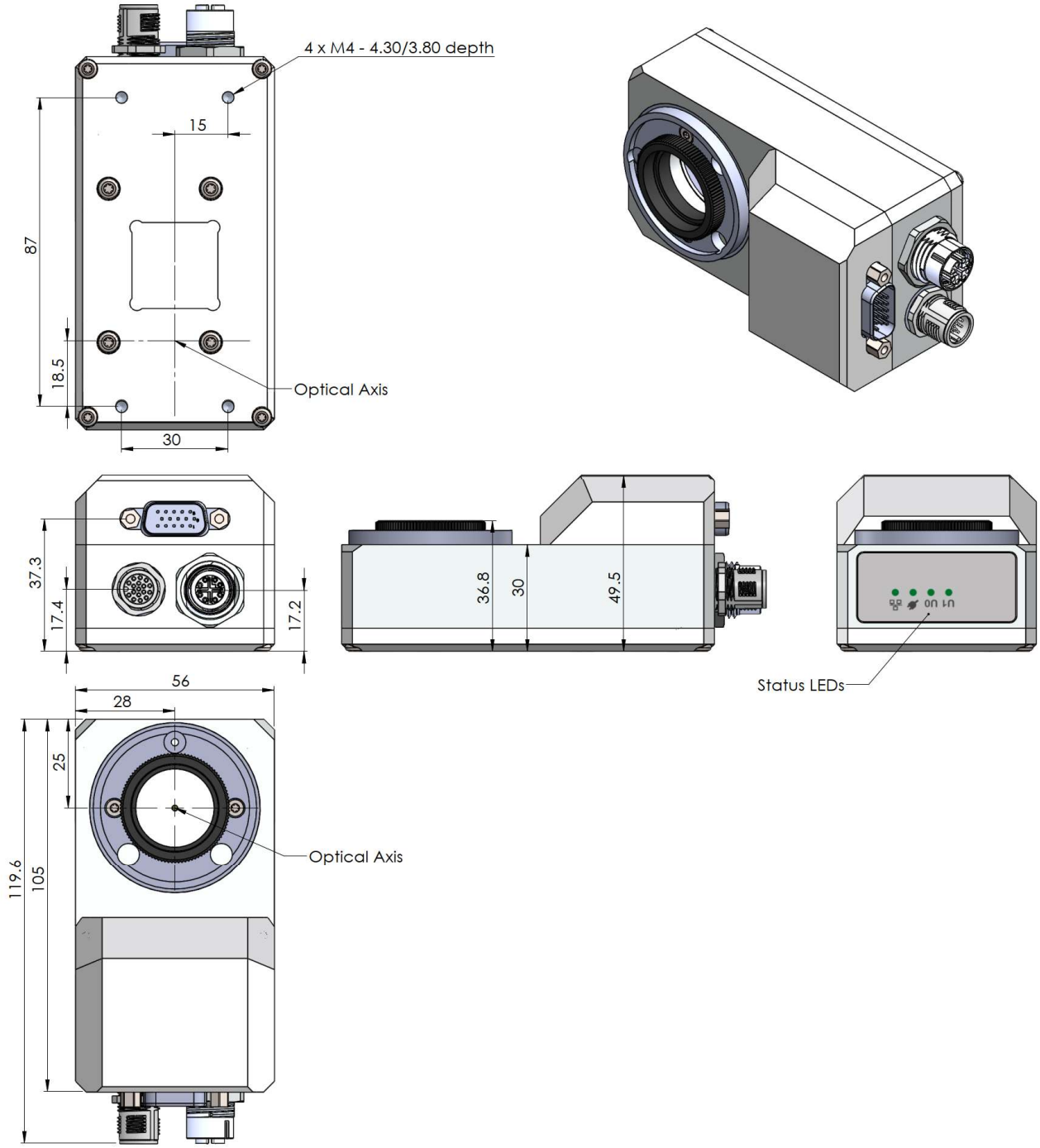

Figure 5: Dimension for Encoder Version

6.1 Additional Information

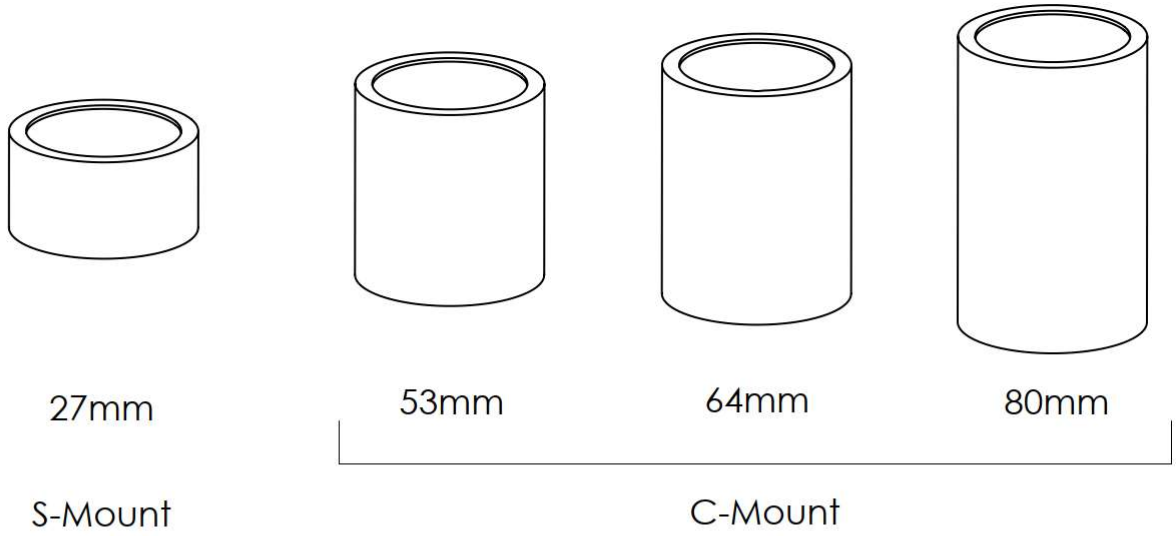

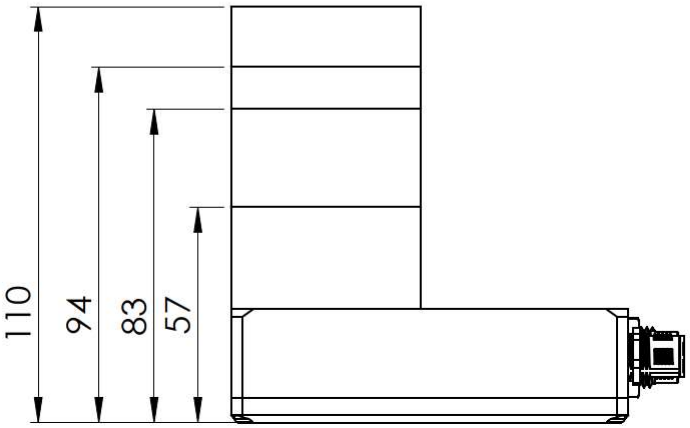

Figure 6: Available Tubes Height

7 Support

Finally, if you have any open questions, the IMAGO support team is happy to assist you in any cases. For direct contact to the support, please use our ticket system: https://imago.freshdesk.com

The SDK documentation is available online: https://api.imago.tech

Visit the IMAGO Download Portal to get access to the latest documentation and Linux releases: https://www.imago-technologies.com/technical-documentation

8 History

Revision	Date	Changes
1.0	July 2023	Initial release
1.1	September 2023	Add missing information in section Operating Conditions Add mechanical drawing of Encoder Version.